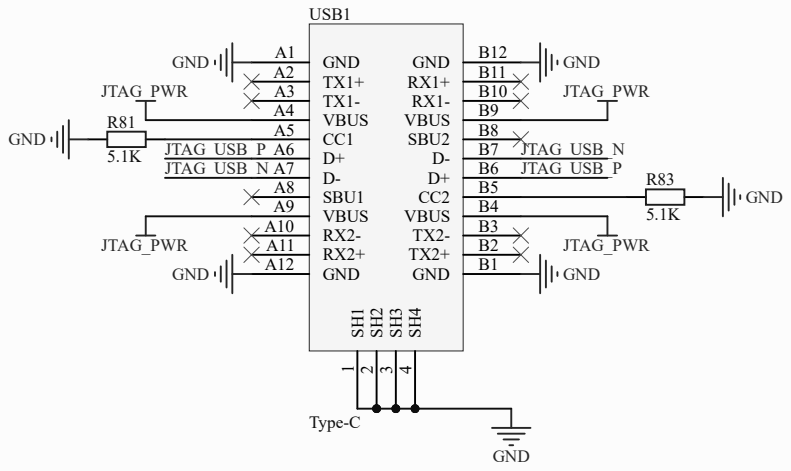

JTAG Type-C接口

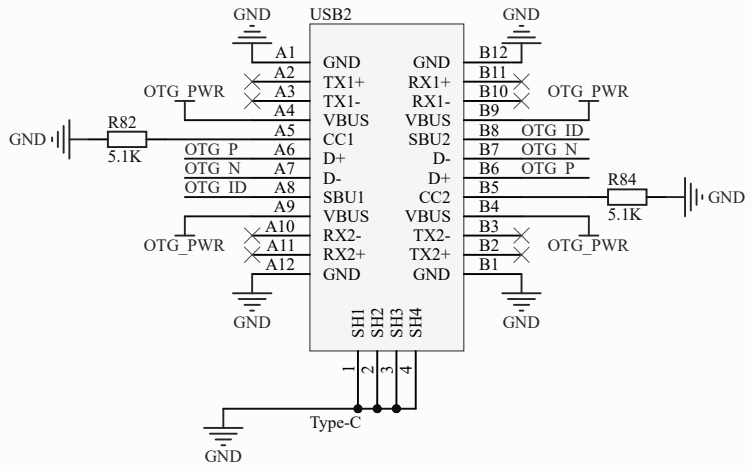

OTG Type-C接口

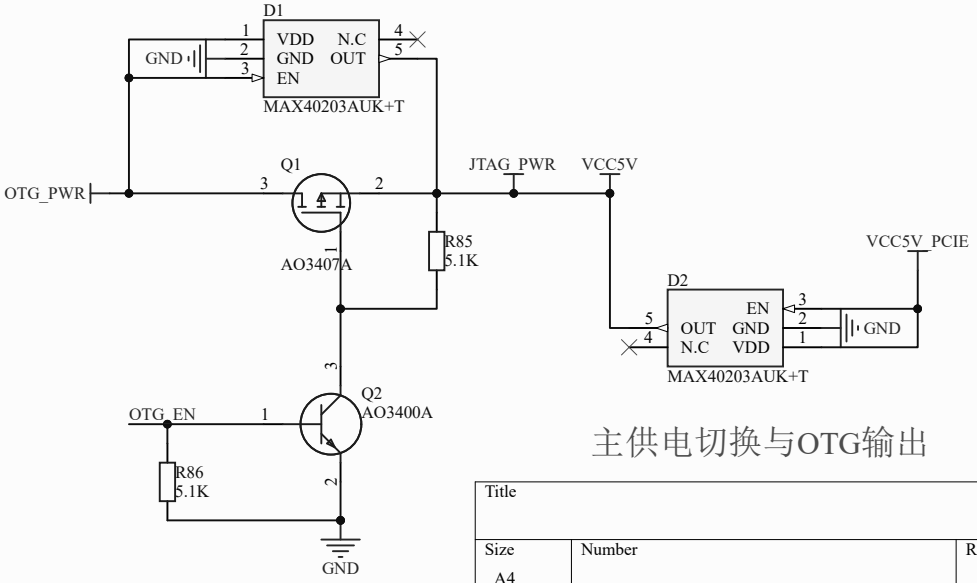

主供电切换与OTG输出

Title		
Size A4	Number	Revision
Date: 5/03/2025		Sheet of
File: F:\A_TEST\..\USB_PMU.SchDoc		Drawn By:

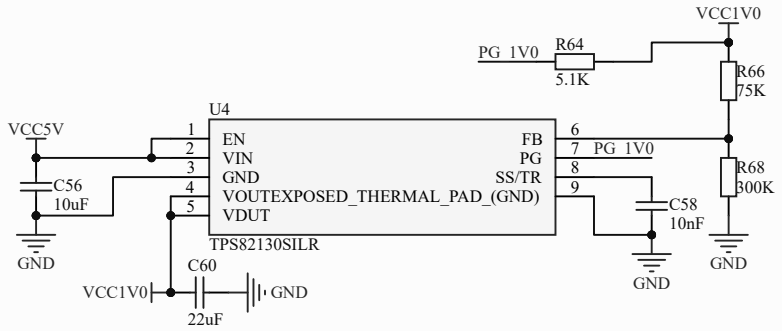

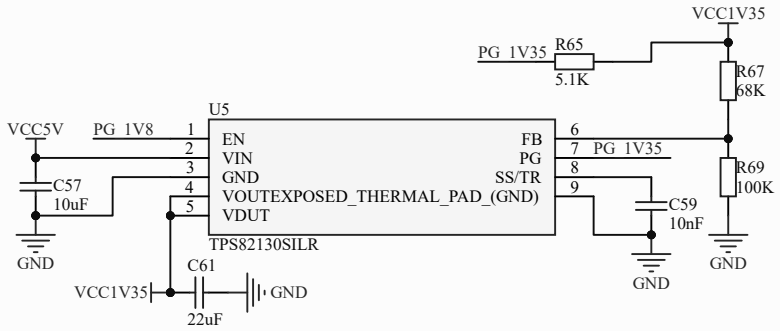

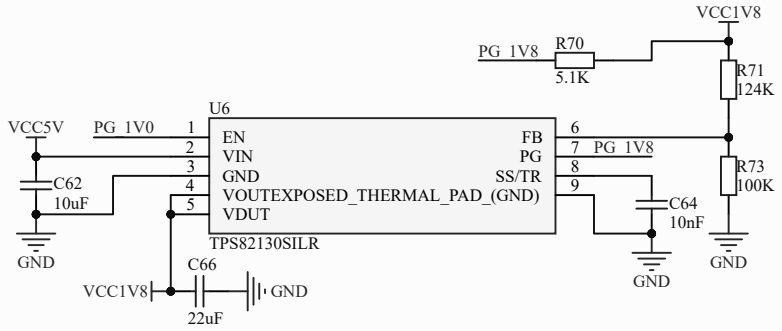

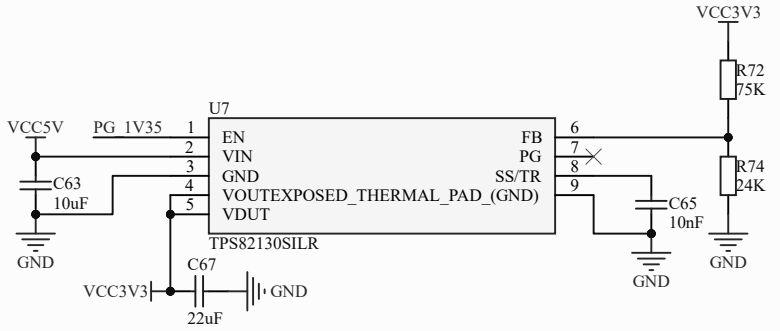

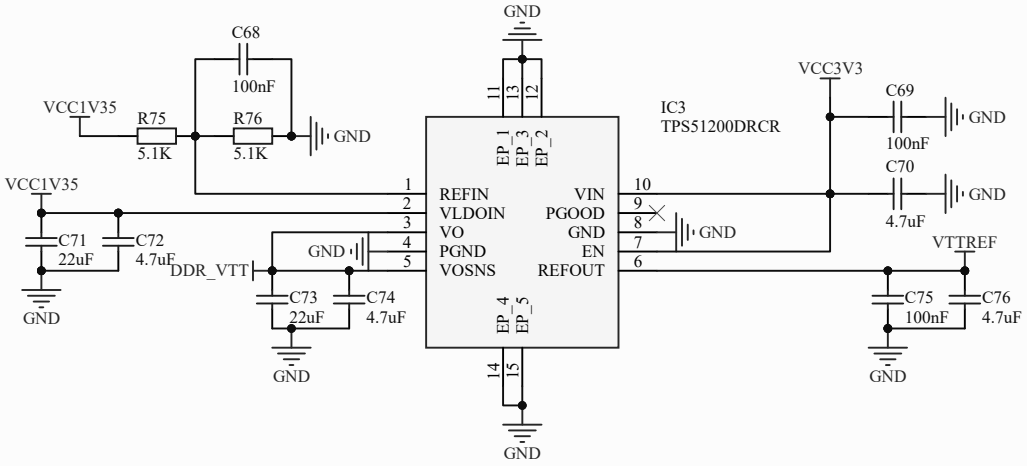

Title		
Size A4	Number	Revision
Date: 5/03/2025		Sheet of
File: F:\A_TEST\..\ZYNQ_PMU.SchDoc		Drawn By:

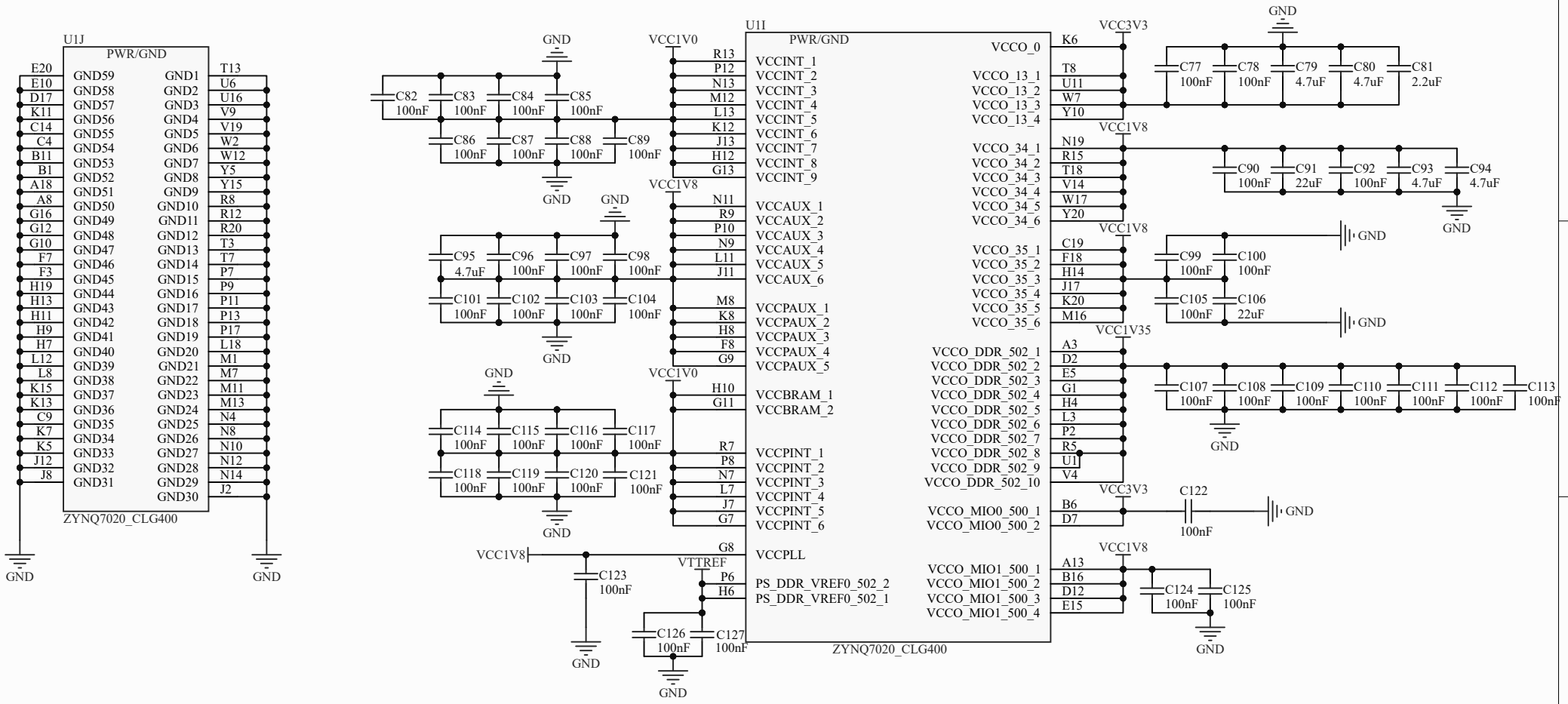

Title		
Size A4	Number	Revision
Date: 5/03/2025	Sheet of	
File: F:\A_TEST\..\ZYNQ_PWR_BANK.SchDoc	Drawn By:	

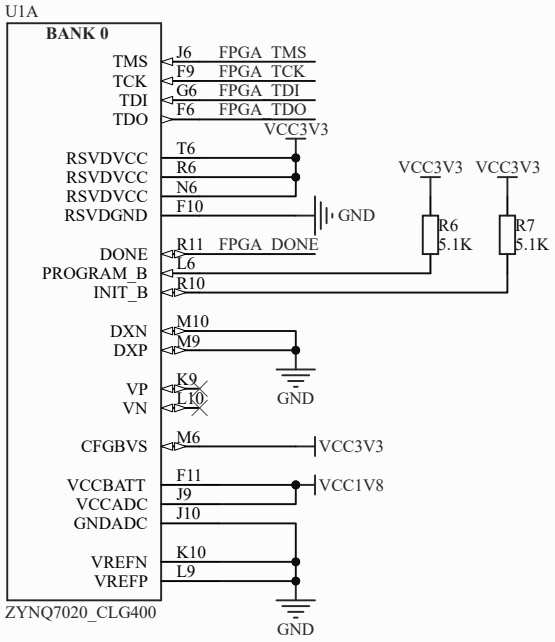

ZYNQ7020 BANK0

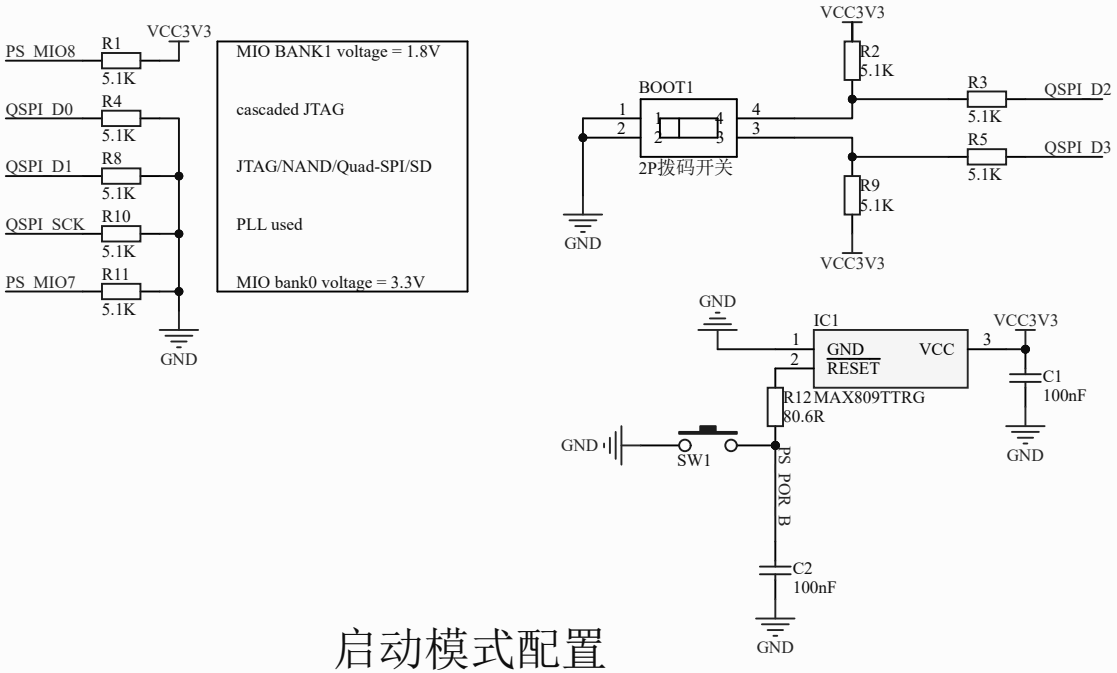

启动模式配置

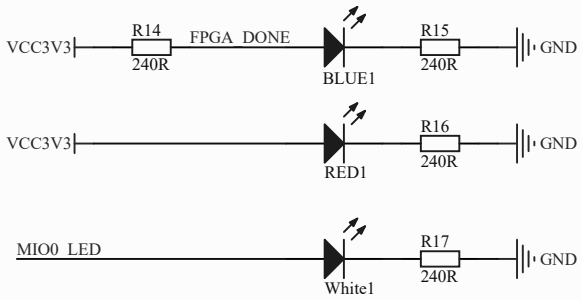

指示灯

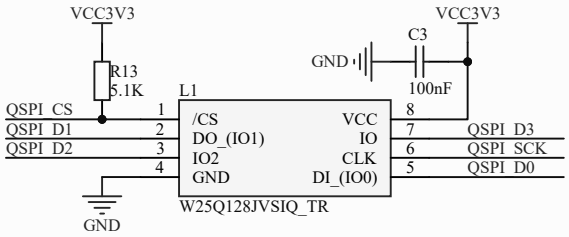

W25Q128 Flash

Title		
Size A4	Number	Revision
Date: 5/03/2025		Sheet of
File: F:\A_TEST\..\ZYNQ_Core.SchDoc		Drawn By:

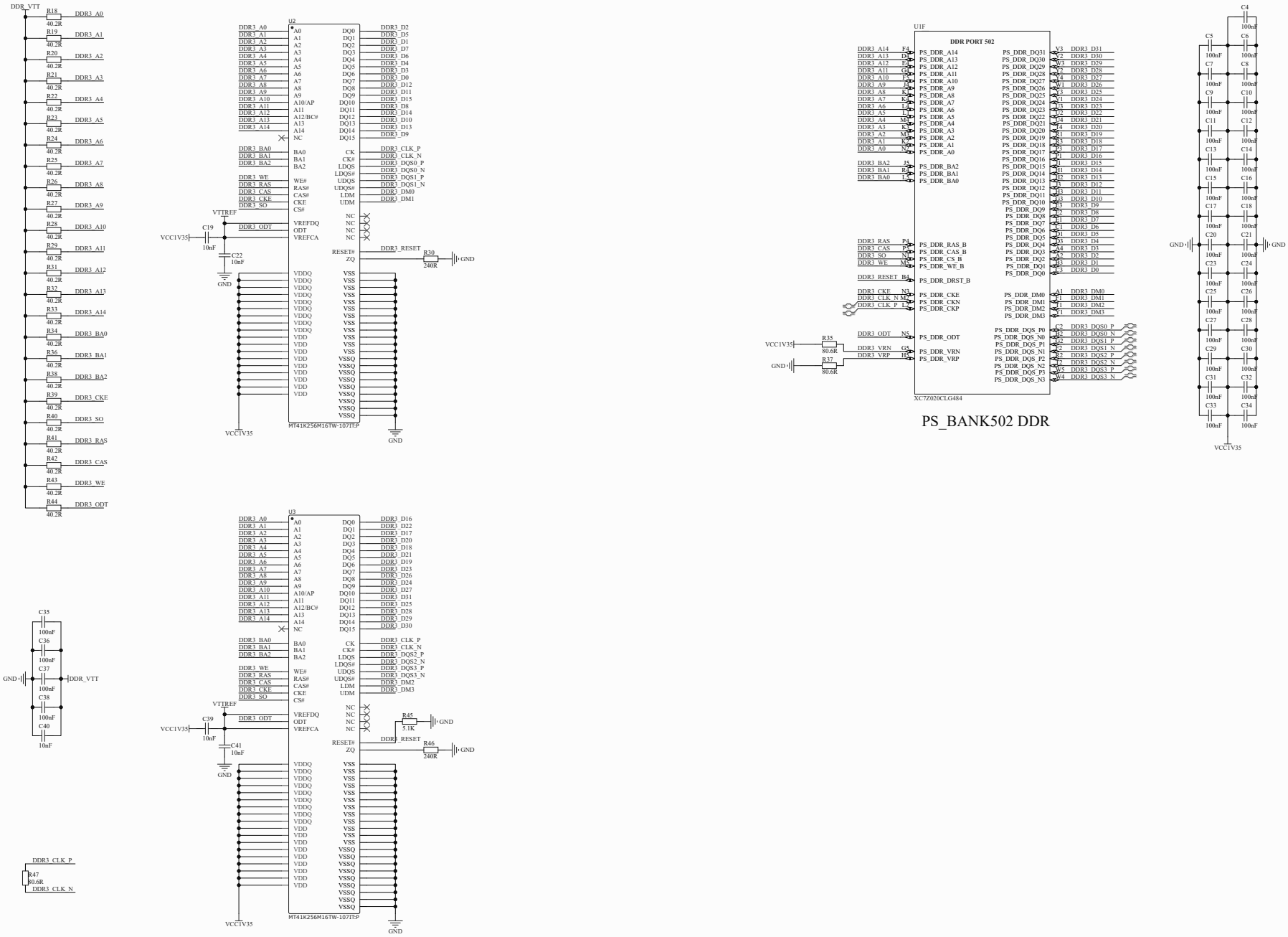

PS_BANK502 DDR

Title	
Size A2	Number / Revision
Date: 5/03/2025	Sheet of
File: F:\A_TEST\...\ZYNQ_DDR3.SchDoc	Drawn By:

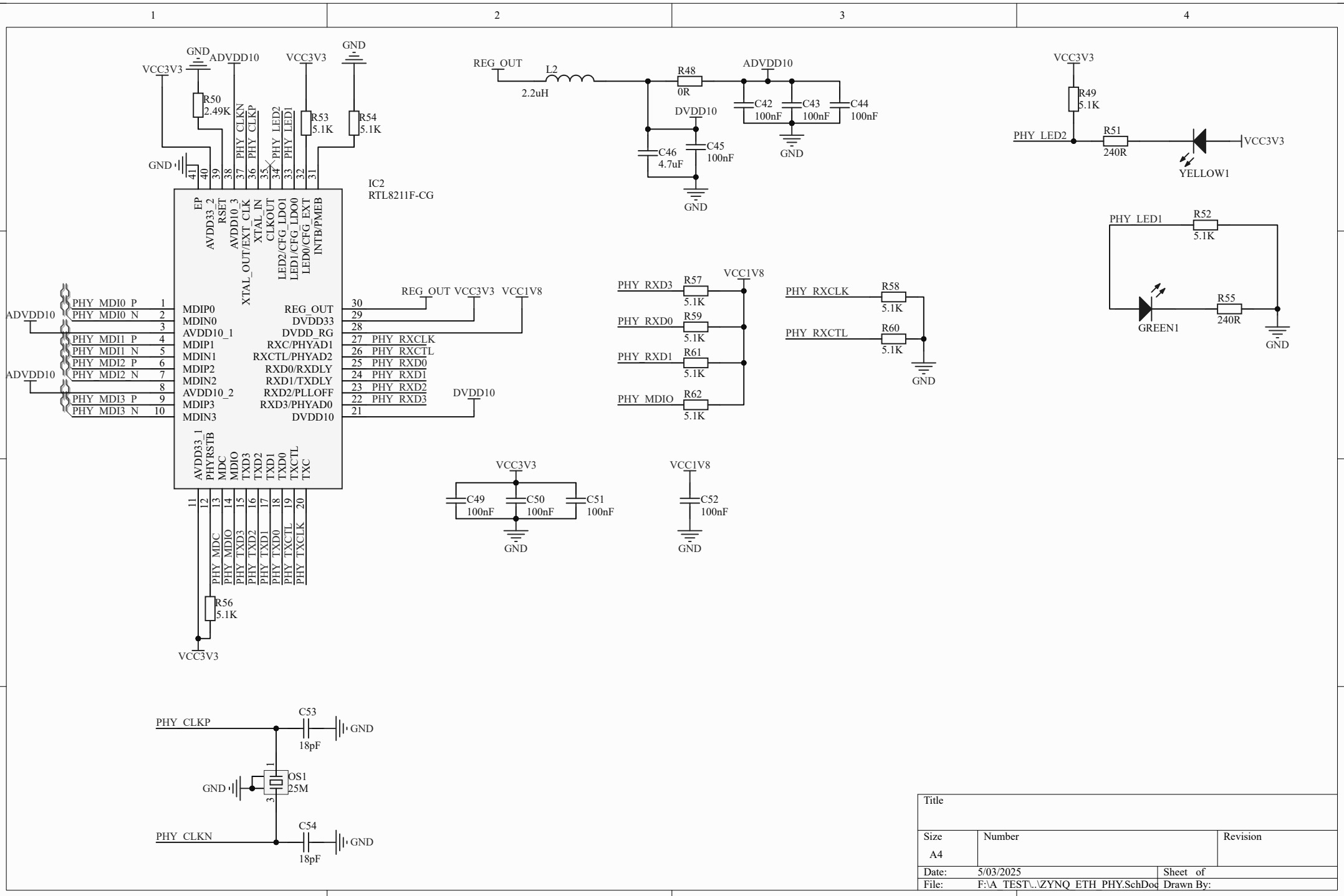
IC2
RTL8211F-CG
EP
AVDD33_2
RSET
AVDD10_3
XTAL_OUT/EXT_CLK
XTAL_IN
CLKOUT
LED2/CFG_LDO1
LED1/CFG_LDO0
LED0/CFG_EXT
INTB/PMEB
MDIP0
MDIN0
AVDD10_1
MDIP1
MDIN1
MDIP2
MDIN2
AVDD10_2
MDIP3
MDIN3
REG_OUT
DVDD33
DVDD_RG
RXC/PHYAD1
RXCTL/PHYAD2
RXD0/RXDLY
RXD1/TXDLY
RXD2/PLLOFF
RXD3/PHYAD0
DVDD10
AVDD33_1
PHYRSTB
MDC
MDIO
TXD3
TXD2
TXD1
TXD0
TXCTL
TXC
PHY_MDI0_P
PHY_MDI0_N
PHY_MDI1_P
PHY_MDI1_N
PHY_MDI2_P
PHY_MDI2_N
PHY_MDI3_P
PHY_MDI3_N
PHY_CLKN
PHY_CLKP
PHY_LED2
PHY_LED1
PHY_RXCLK
PHY_RXCTL
PHY_RXD3
PHY_RXD2
PHY_RXD1
PHY_RXD0
PHY_MDIO
PHY_TXD3
PHY_TXD2
PHY_TXD1
PHY_TXD0
PHY_TXCTL
PHY_TXCLK
ADVDD10
VCC3V3
VCC1V8
DVDD10
GND
REG_OUT
L2
2.2uH
R48
0R
C42
100nF
C43
100nF
C44
100nF
C45
100nF
C46
4.7uF
R49
5.1K
R50
2.49K
R51
240R
R52
5.1K
R53
5.1K
R54
5.1K
R55
240R
R56
5.1K
R57
5.1K
R58
5.1K
R59
5.1K
R60
5.1K
R61
5.1K
R62
5.1K
YELLOW1
GREEN1
C49
100nF
C50
100nF
C51
100nF
C52
100nF
C53
18pF
C54
18pF
OS1
25M
Title
Size
A4
Number
Revision
Date:
5/03/2025
Sheet of
File:
F:\A_TEST\..\ZYNQ_ETH_PHY.SchDoc
Drawn By:

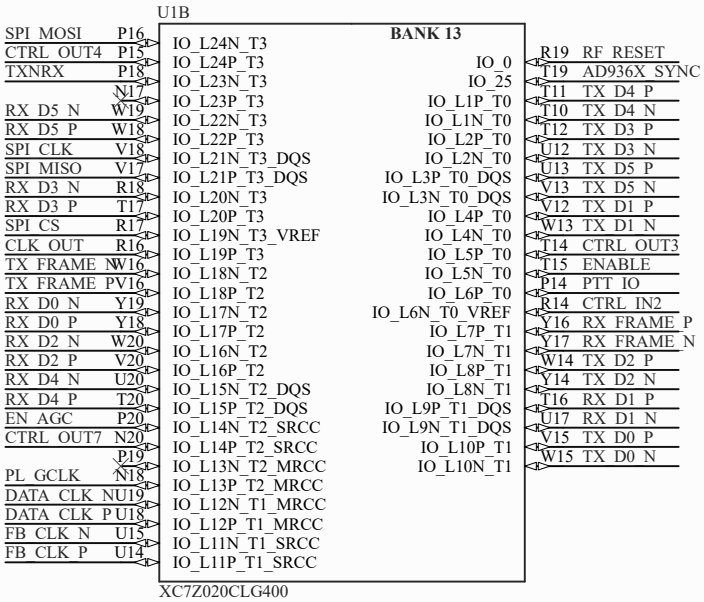

PL端BANK34

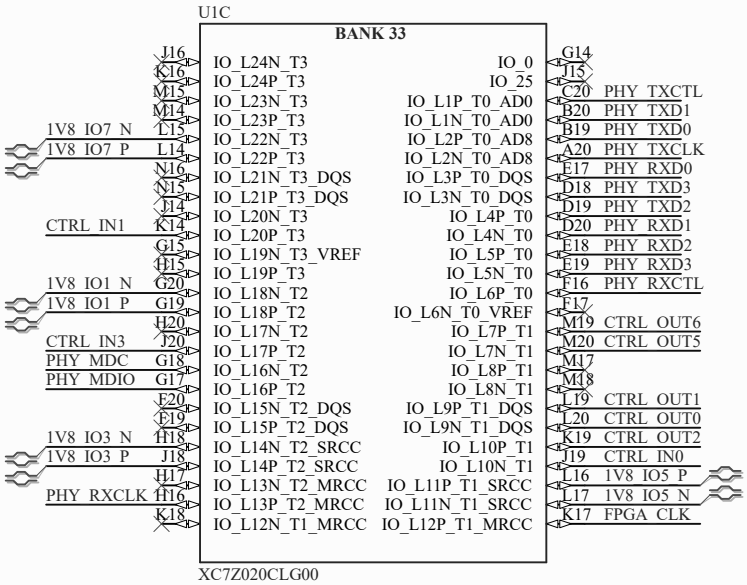

PL端BANK35

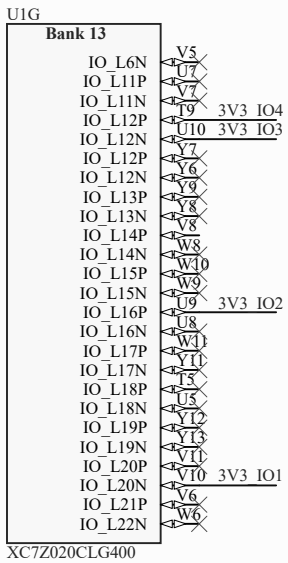

PL端BANK13

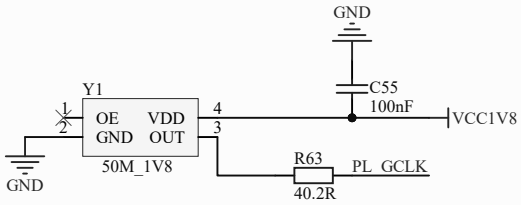

PL端时钟50M

Title		
Size A4	Number	Revision
Date: 5/03/2025	Sheet of	
File: F:\A_TEST\..\ZYNQ_PL_BANK.SchDoc	Drawn By:	

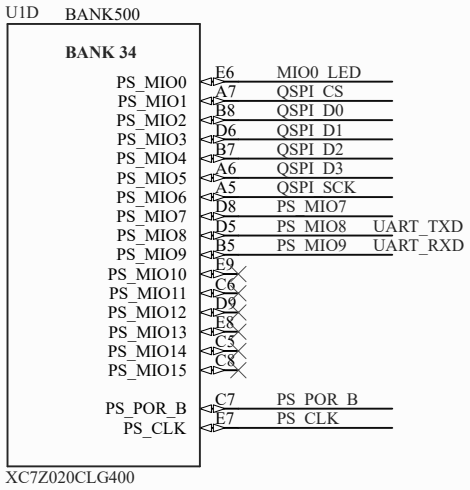

PS端BANK500

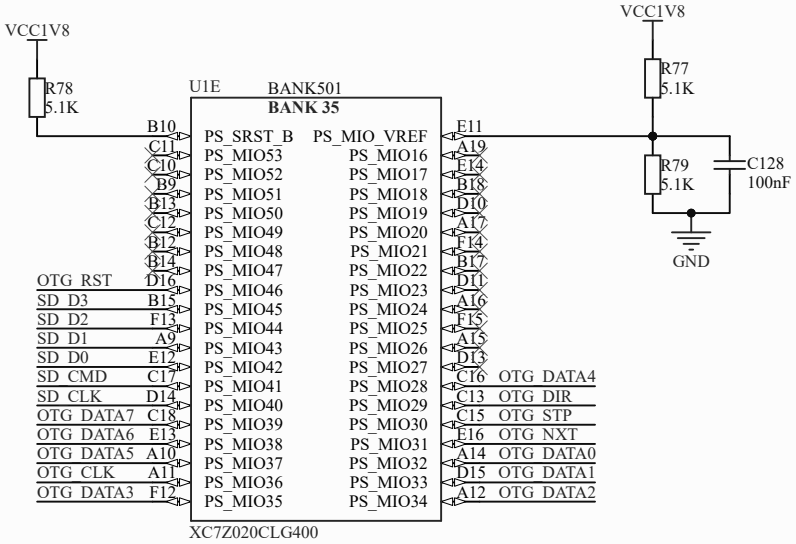

PS端BANK501

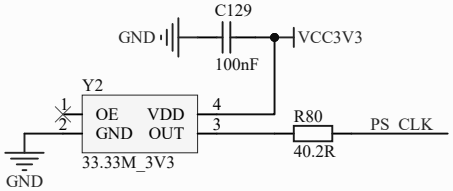

PS端时钟

Title		
Size A4	Number	Revision
Date: 5/03/2025	Sheet of	
File: F:\A_TEST\..\ZYNQ_PS_BANK.SchDoc	Drawn By:	

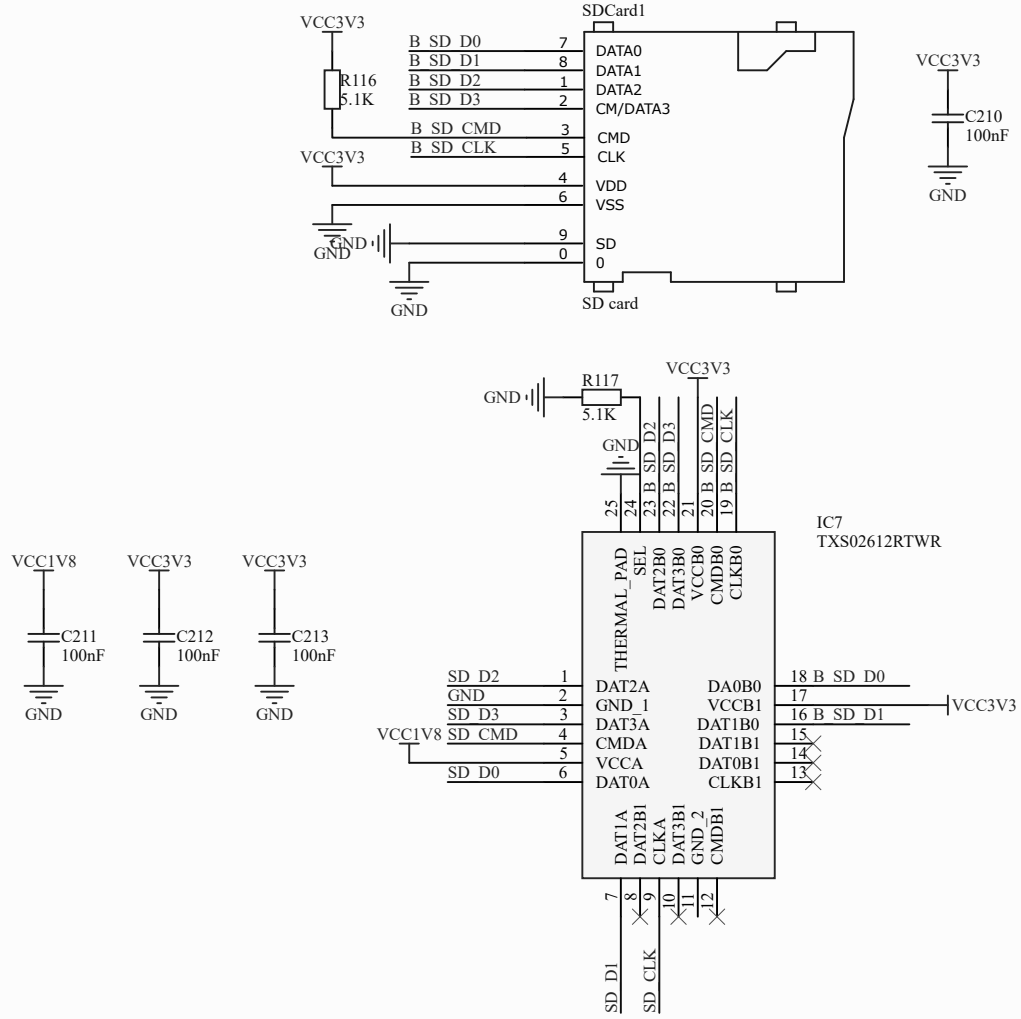

Title		
Size A4	Number	Revision
Date: 5/03/2025		Sheet of
File: F:\A_TEST\..\ZYNQ_SD.SchDoc		Drawn By:

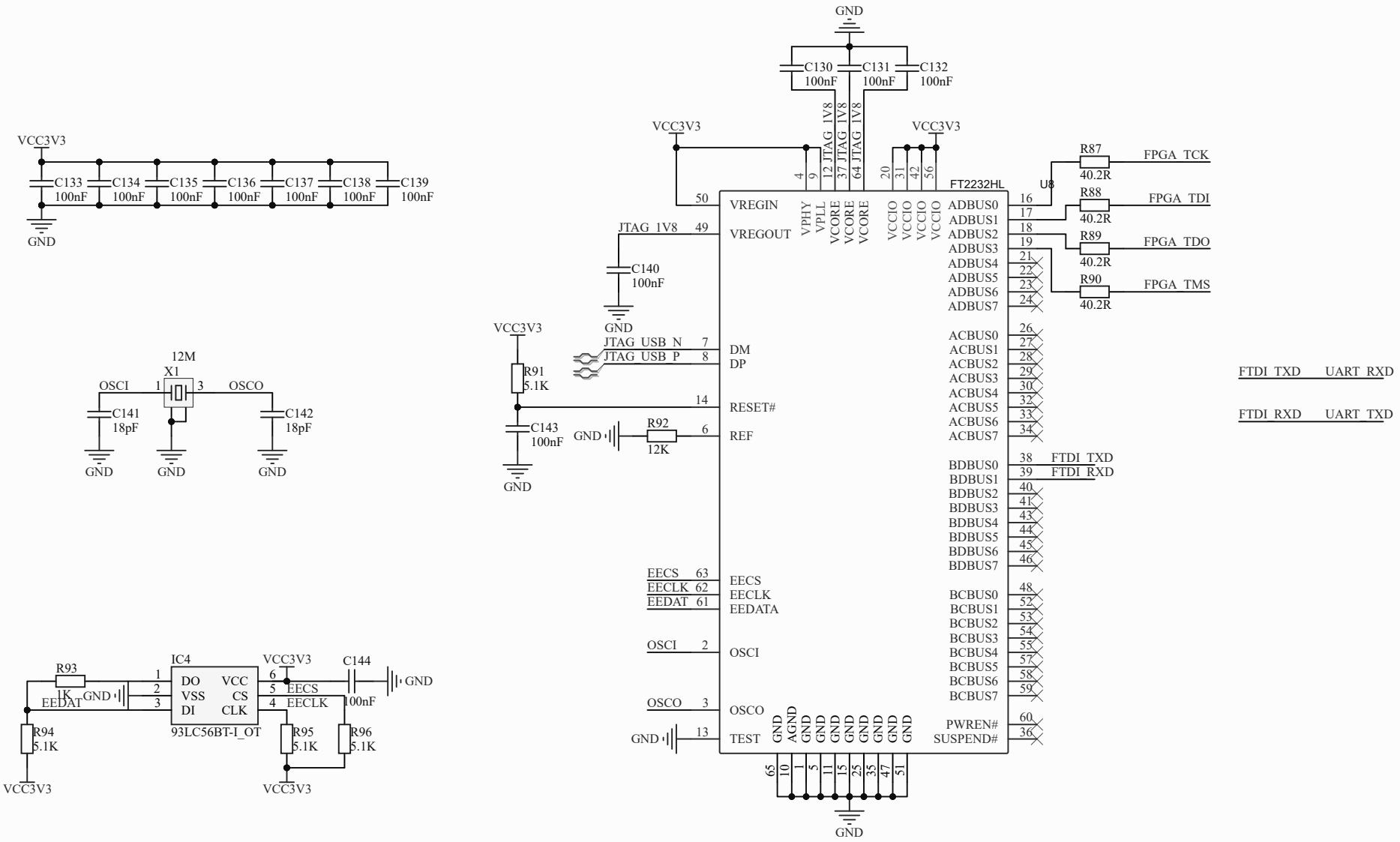

Title		
Size A4	Number	Revision
Date: 5/03/2025		Sheet of
File: F:\A_TEST\..\ZYNQ_JTAG.SchDoc		Drawn By:

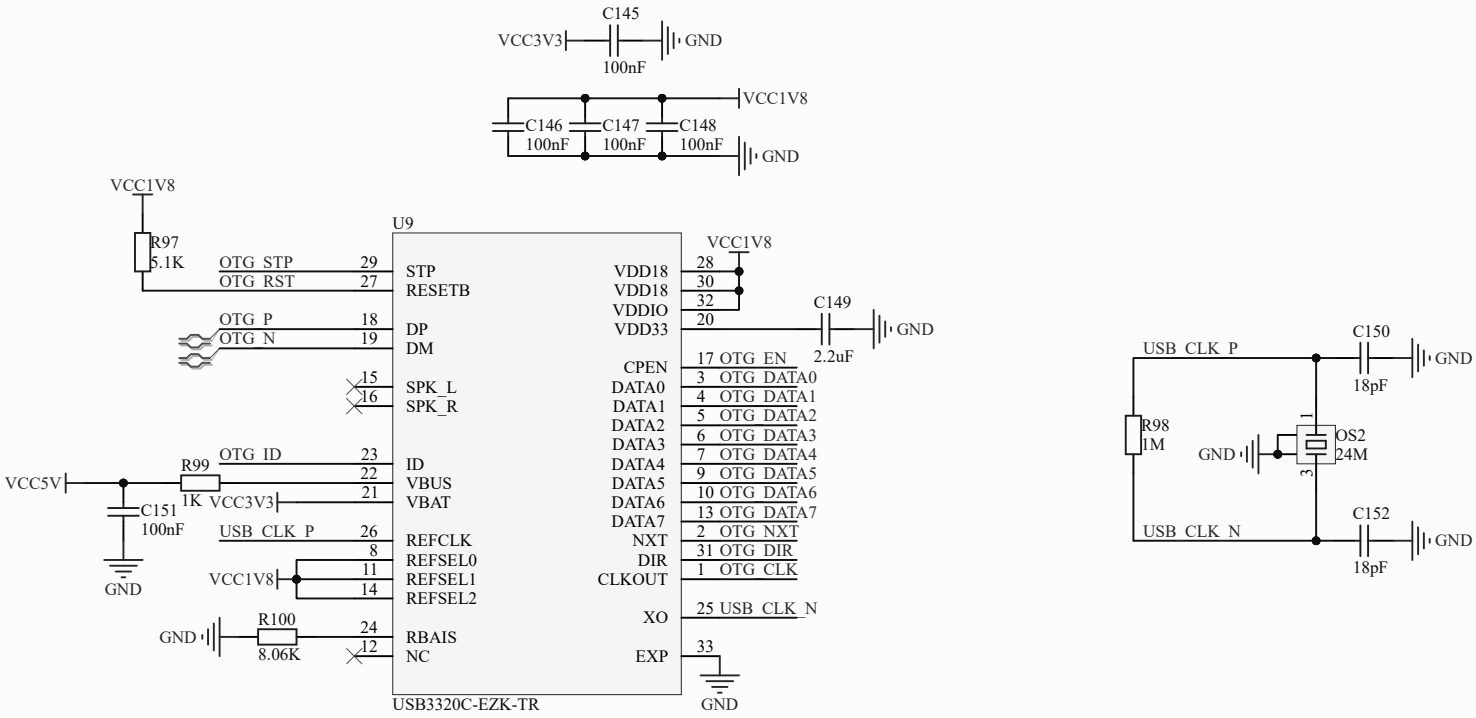

Title		
Size A4	Number	Revision
Date: 5/03/2025	Sheet of	
File: F:\A_TEST\..\ZYNQ_USB_PHY.SchDoc	Drawn By:	

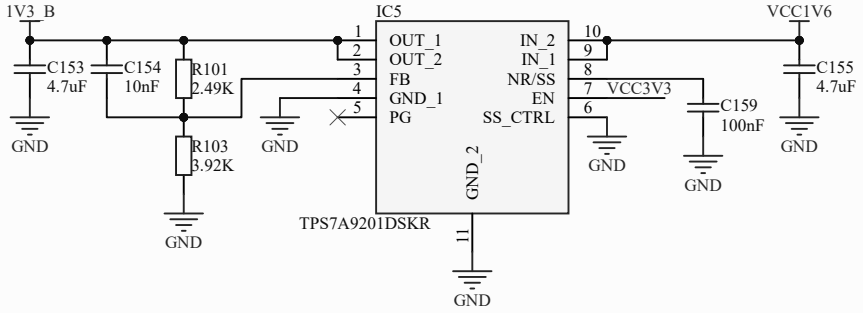

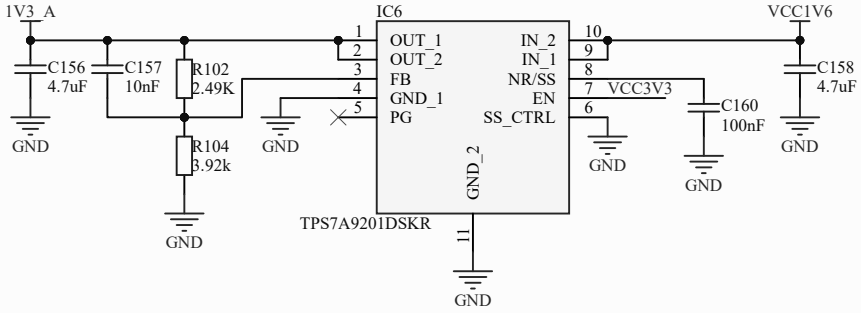

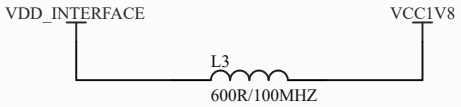

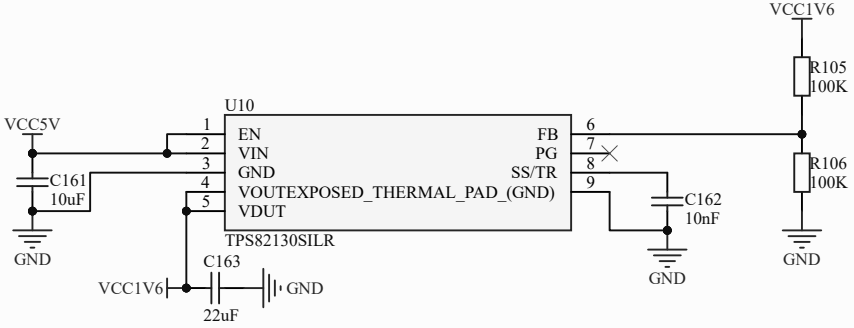

Title		
Size A4	Number	Revision
Date: 5/03/2025		Sheet of
File: F:\A_TEST\..\AD936X_PMU.SchDoc		Drawn By:

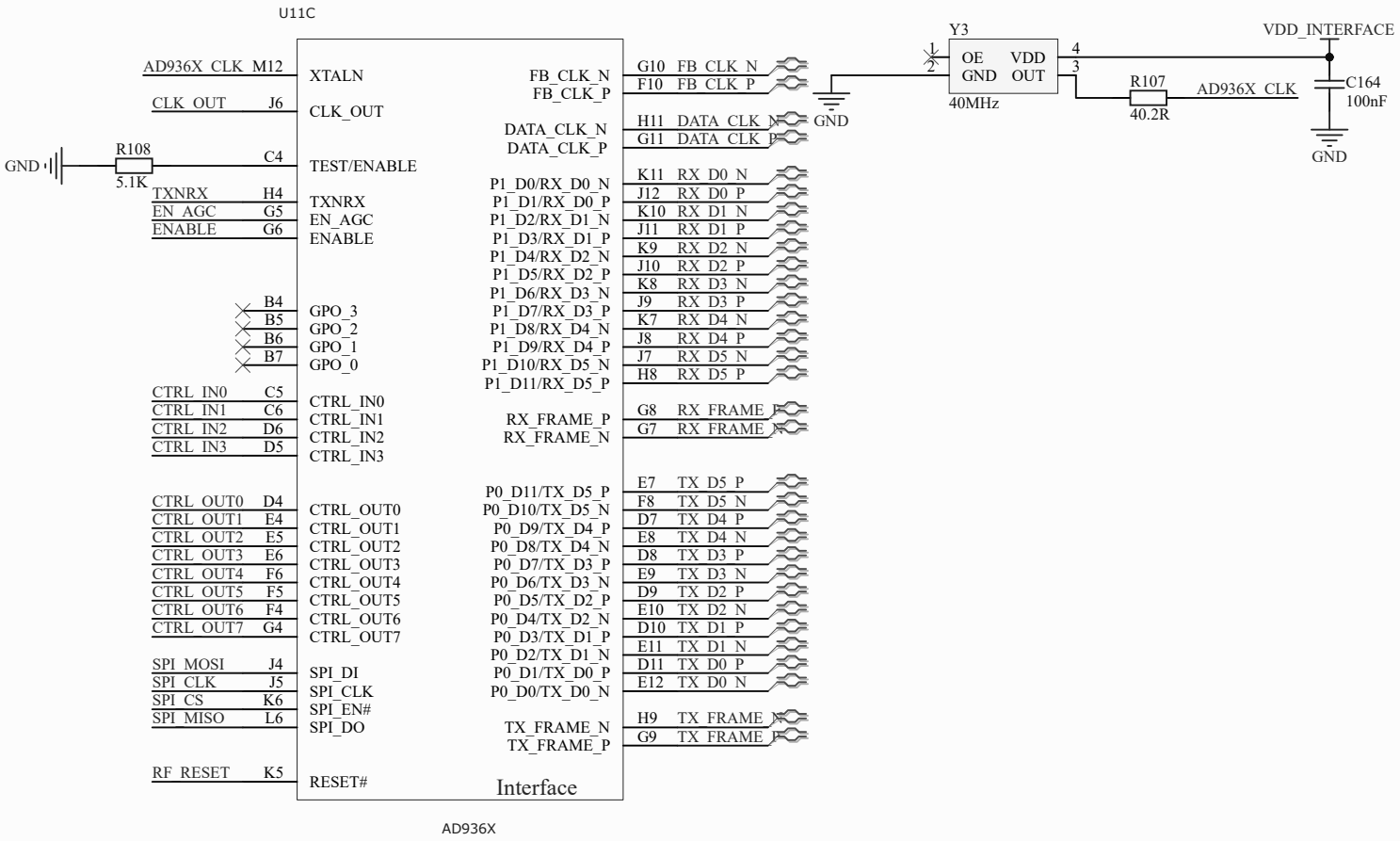

Title		
Size A4	Number	Revision
Date: 5/03/2025		Sheet of
File: F:\A_TEST\..\AD936X_Digital.SchDoc		Drawn By:

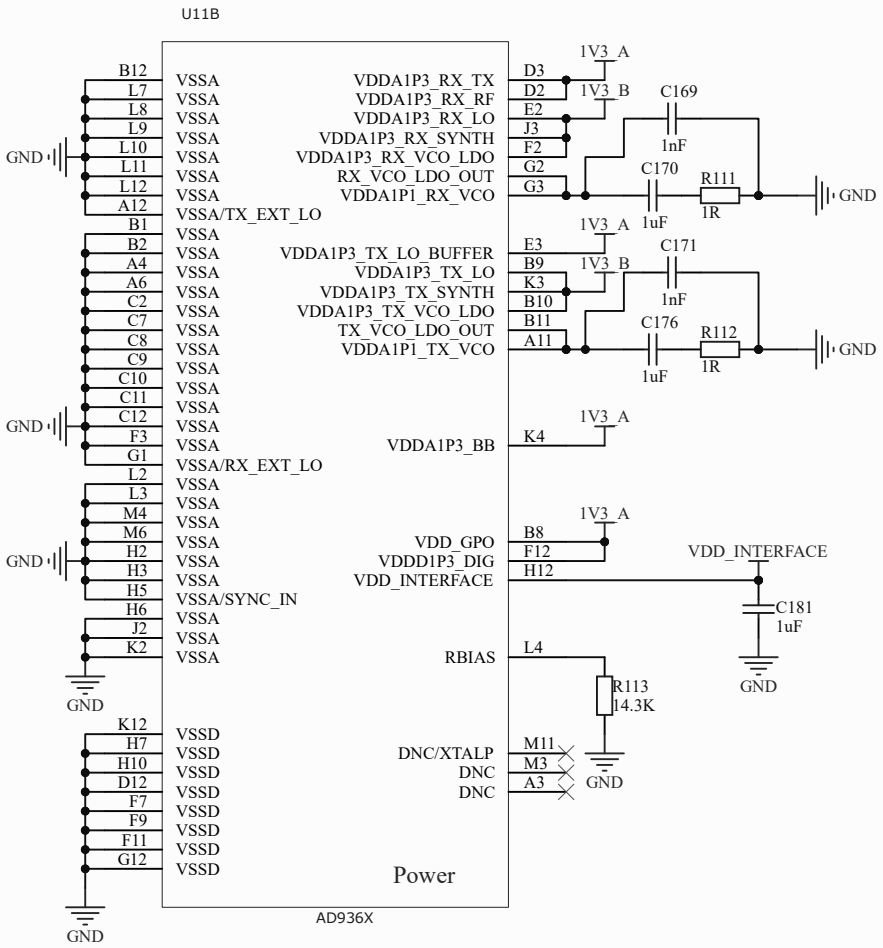

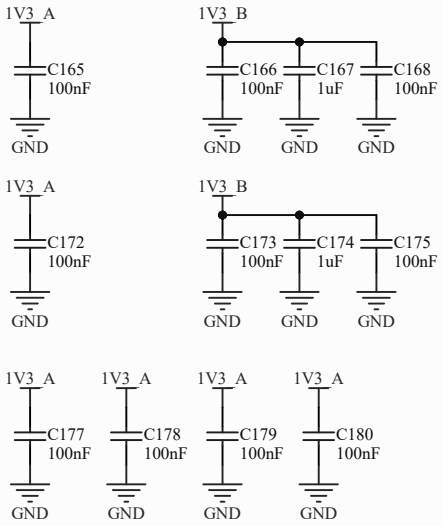

Title		
Size A4	Number	Revision
Date: 5/03/2025		Sheet of
File: F:\A_TEST\..\AD936X_Power.SchDoc		Drawn By:

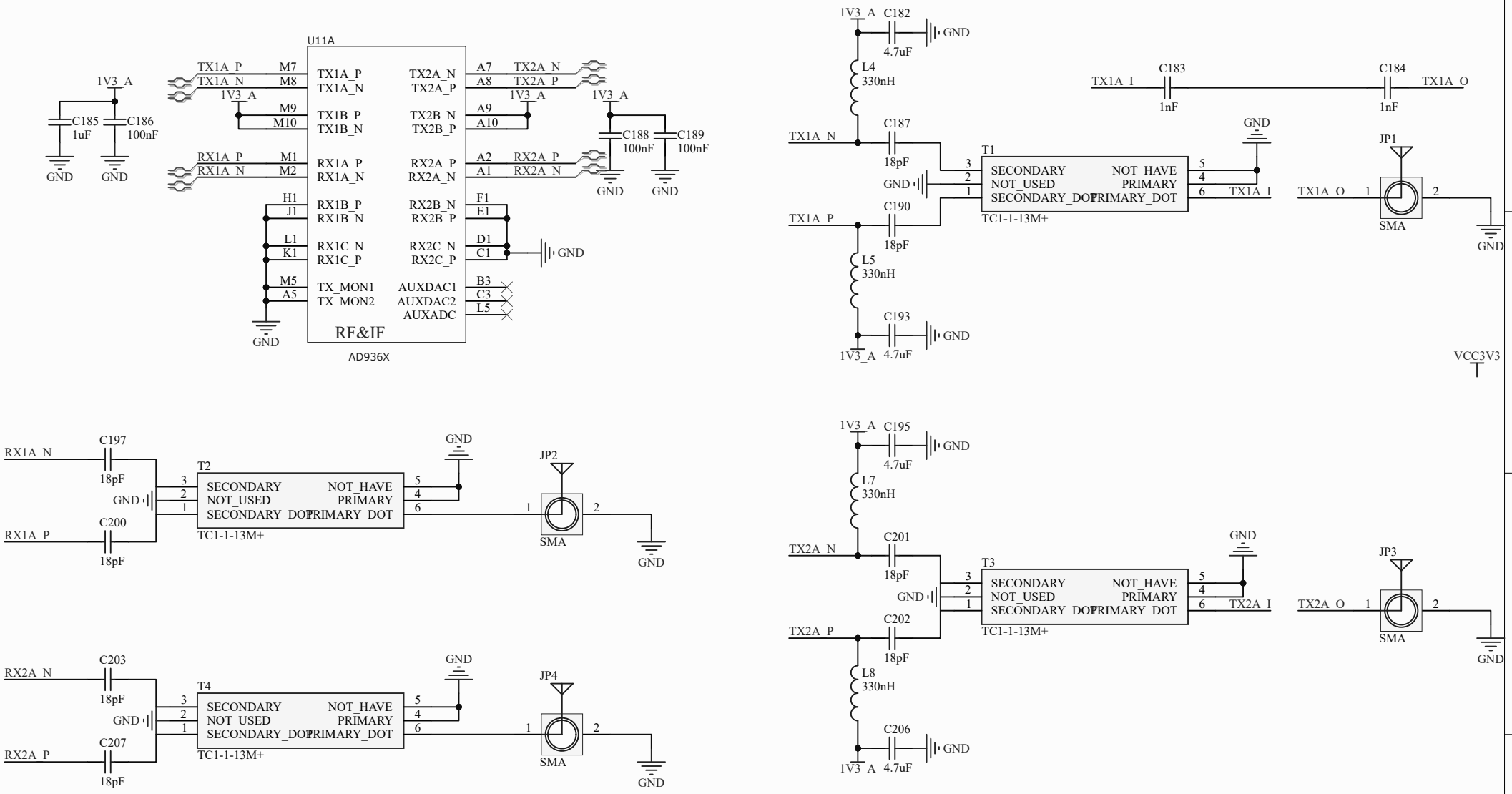

Title		
Size A4	Number	Revision
Date: 5/03/2025		Sheet of
File: F:\A_TEST\..\AD936X_RF.SchDoc		Drawn By:

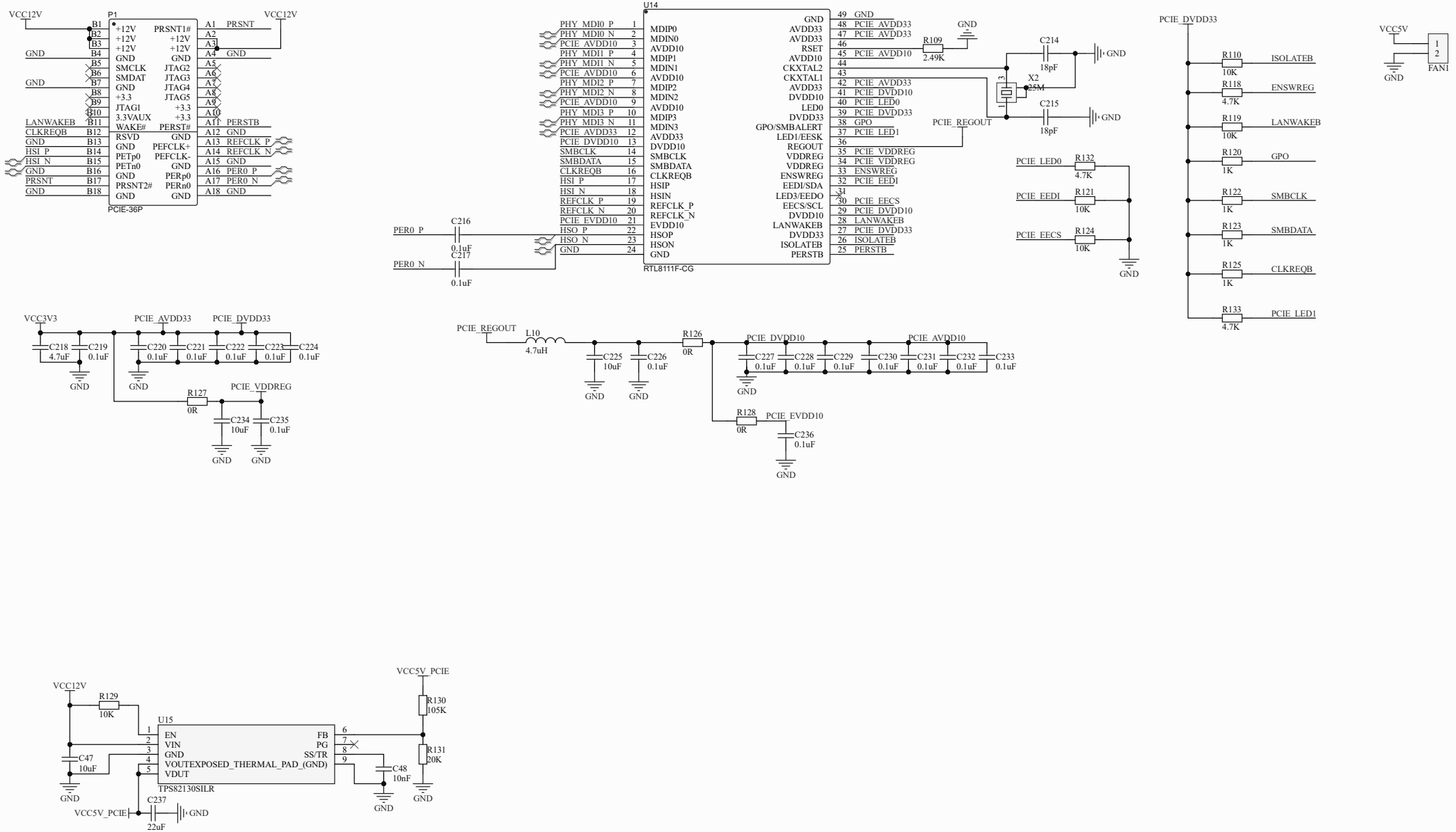

Title		
Size A3	Number	Revision
Date: 5/03/2025	Sheet of	
File: F:\A_TEST\PCIE_SDR\SDR_NEW\PCIE.SchDoc	Drawn By:	